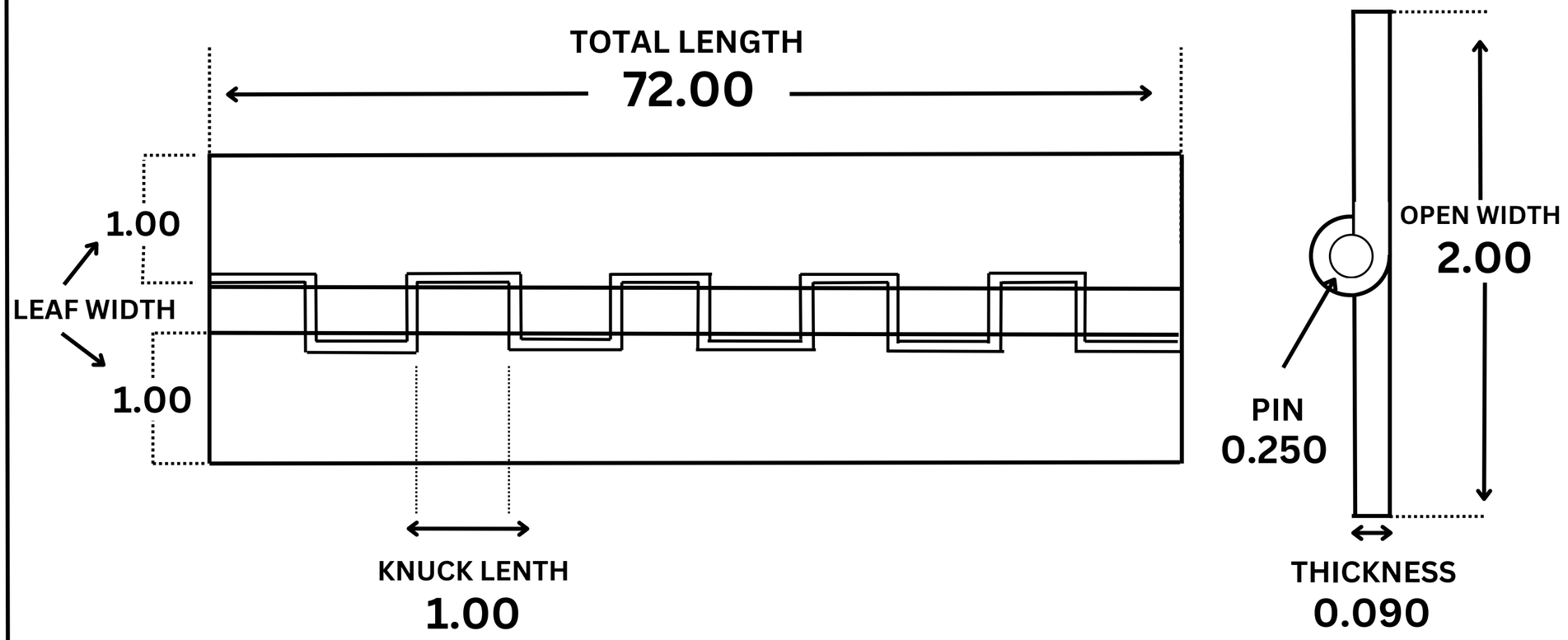

IMPORTANT

MEASUREMENTS AND WEIGHTS LOADS ONLY TO BE USED AS A REFERENCE AND GERNAL GUILDLINE. VISIT WEBSITE FOR DISCLAMER.

Marr Weld-On Hinges
14770 64 Ave, Surrey, BC

Leaf Material	*Aluminum*
Pin Material	*Aluminum*
Finish	*MILL*

PROJECT	CONTINUOUS HINGE		
TITLE	A093032-6		
SIZE B	CODE #A093032-6	DWG NO 00076	REV
SCALE :*NTS*	MEASUREMENT: INCHES		