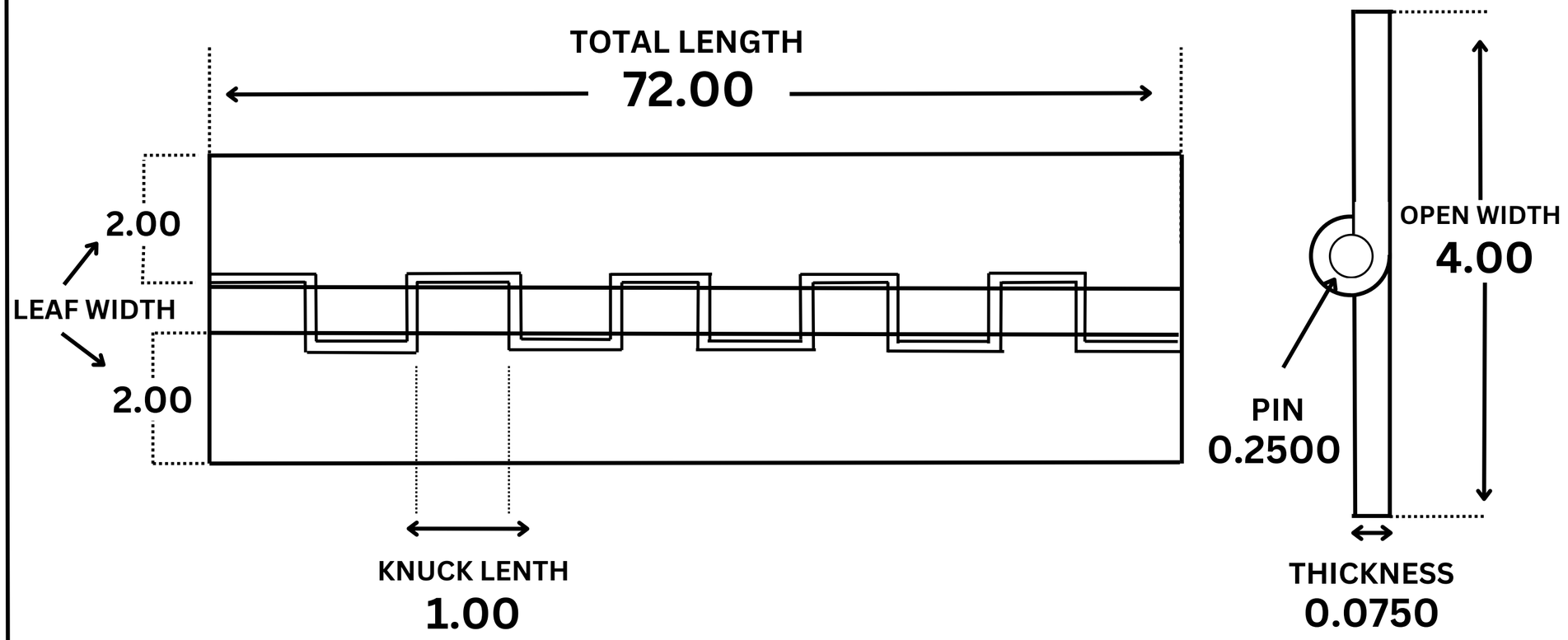

IMPORTANT

MEASUREMENTS AND WEIGHTS LOADS ONLY TO BE USED AS A REFERENCE AND GERNAL GUILDLINE. VISIT WEBSITE FOR DISCLAMER.

Marr Weld-On Hinges
14770 64 Ave, Surrey, BC

Leaf Material	*304 SS*
Pin Material	*304 SS*
Finish	*2B*

PROJECT: CONTINUOUS HINGE

TITLE: **SS076064-6**

SIZE	CODE	DWG NO	REV
B	#SS076064-6	00141	

SCALE :*NTS* | MEASUREMENT: INCHES