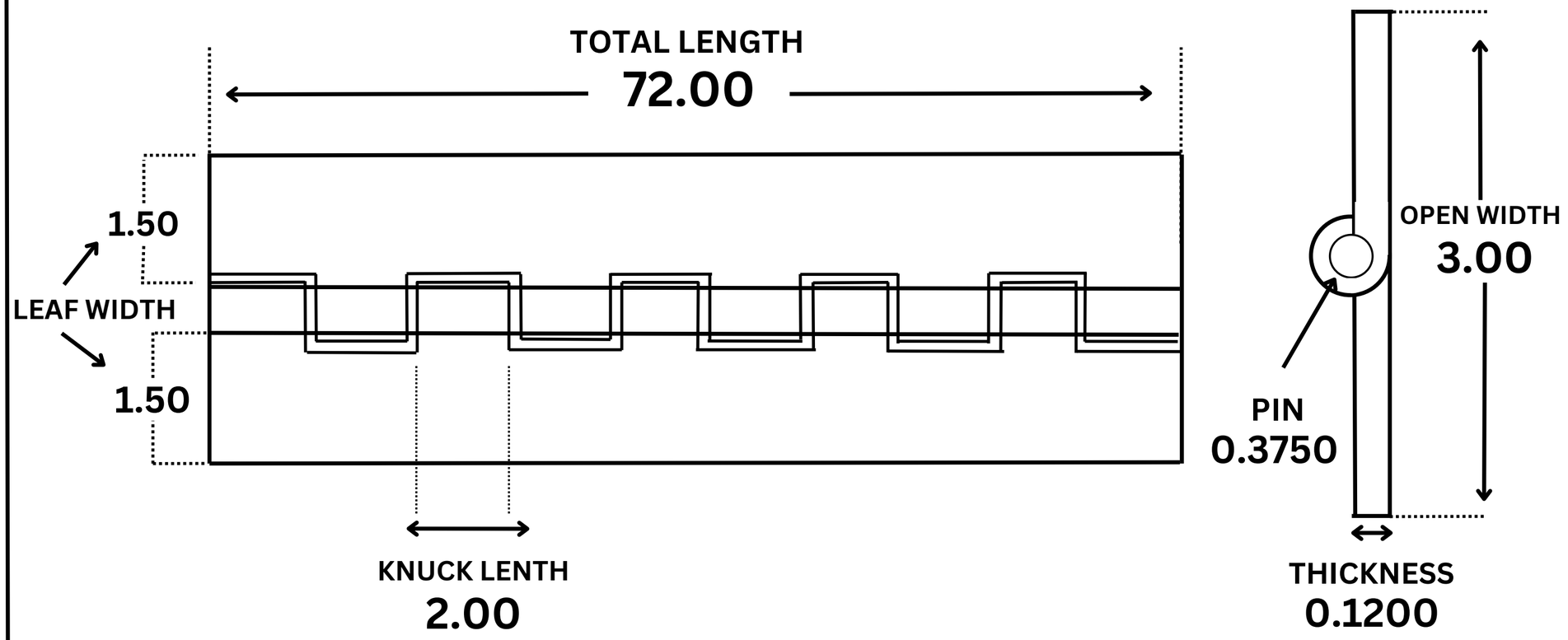

IMPORTANT

MEASUREMENTS AND WEIGHTS LOADS ONLY TO BE USED AS A REFERENCE AND GERNAL GUILDLINE. VISIT WEBSITE FOR DISCLAMER.

Marr Weld-On Hinges
14770 64 Ave, Surrey, BC

Leaf Material	*304 SS*
Pin Material	*304 SS*
Finish	*2B*

PROJECT	CONTINUOUS HINGE		
TITLE	**SS120048-6**		
SIZE B	CODE #SS120048-6	DWG NO 00143	REV
SCALE :*NTS*	MEASUREMENT: INCHES		